SIZE B | 16C4-B-3-3903DD | REV. -

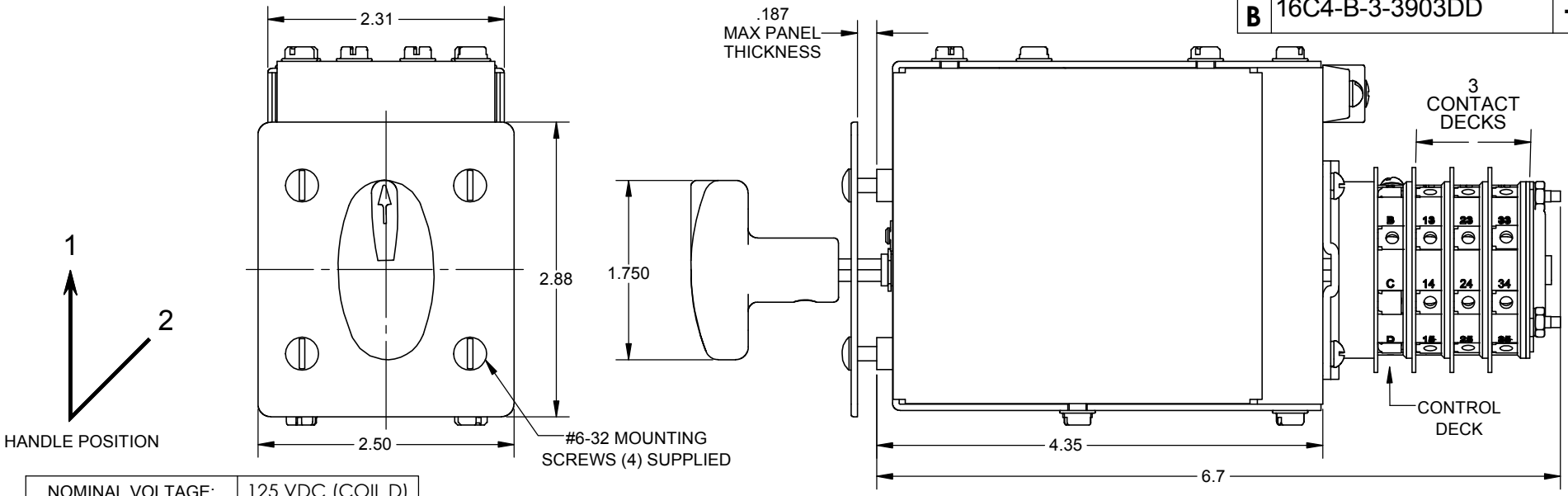

NOMINAL VOLTAGE:	125 VDC (COIL D)
OPERATING RANGE:	100-140 VDC
COIL BURDEN:	4.1 AMPS
	510 WATTS
COIL RESISTANCE:	30 OHMS
RESPONSE TIME:	35 MSEC (NOM)

PANEL DRILLING DIMENSIONS

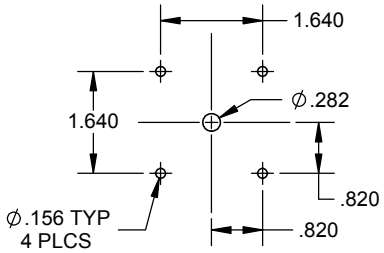

DECK	CONTACTS	POSITION 1	POSITION 2
1	11 — 13	X	
	12 — 14		X
	15 — 17	X	
	16 — 18		X
2	21 — 23	X	
	22 — 24		X
	25 — 27	X	
	26 — 28		X
3	31 — 33	X	
	32 — 34		X
	35 — 37	X	
	36 — 38		X

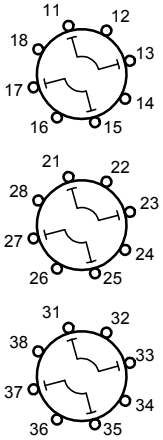

CONTROL DECK LAYOUT AND WIRING
SHOWN IN NORMAL POSITION

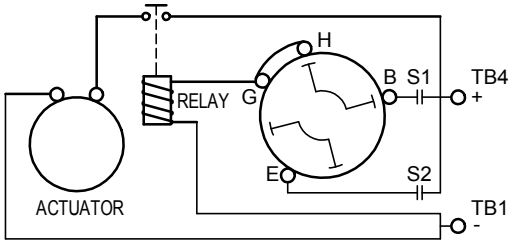

CONTACTS	POSITION 1	POSITION 2
B — H	X	
E — G		X

SIZE B | 16C4-B-3-3903DD

SPECTRUM INDUSTRIES INC.
461 BOSTON STREET - UNIT E6, TOPSFIELD, MA 01983 USA

UNLESS OTHERWISE STATED
DIMENSIONS ARE IN INCHES
TOLERANCES:
FRACTIONAL ±1/32
ANGULAR: MACH ± BEND ±
TWO PLACE DECIMAL ±.010
THREE PLACE DECIMAL ±.003

	NAME	DATE
DRAWN	J.P.	8-1-18
ENG APPR.	PDD	8-1-18

TITLE:

LATCHING SWITCH RELAY 3 DECK SWITCH

DO NOT SCALE DRAWING

REV. -